SEALPROOF®

Electrical Nonmetallic Conduit (ENT)

c UL us LISTED
E530821

- Available ½" through 1-½"
- All sizes FT4 rated
- Compatible with any UL approved ENT fittings
- Standard color - Gray
- Durable, nonconducting rigid PVC construction
- Suitable for encasement in concrete, direct burial or in walls and ceiling (per NEC code)

Trade Size	Coil Part No.	Coil Length	Reel Part No.	Reel Dims.	Reel Length	PART # 10' Sticks	Sticks/Pallet
1/2"	ENT050	200'	ENT050R-1500	36" X 24"	1500'	ENT050-10	5000'/Pallet
3/4"	ENT075	100'	ENT075-1000	36" X 24"	1000'	ENT075-10	4000'/Pallet
1"	ENT100	100'	ENT100R-750	36" X 24"	750'	ENT100-10	3000'/Pallet
1-1/4"			ENT125R-1000	48" X 32"	1000'		
1-1/2"			ENT150R-750	48" X 32"	750'		

1 GANG EXTRA DUTY PLASTIC IN-USE COVERS

c UL us LISTED
E362580

- UL **Extra Duty** Listed
- Patented Multi-Configuration Design
- 1 Gang can be used Horizontally or Vertically
- Durable Polycarbonate Construction
- Lockable
- Easy to Install
- Includes Gasket and Mounting Hardware
- NEC Compliant

18in1

Mounts Horizontally or Vertically

Fits Full Size Padlock

1GWIUXD
3-1/4" Deep

1GWIUXDB
4" Deep
Extra Deep Base
For Siding

1GWIUXDP
5-1/4" Deep
Extra Deep Cover

GFCI Duplex Switch
6 Rounds:
1-1/4" 1-3/8" 1-9/16" 1-5/8" 1-11/16" 2-1/8"

Superflex Item No.	Description	Color	Pkg Qty
1GWIUXD	1-Gang Extra Duty In-Use Cover 18 in 1	Clear/Gray	10
1GWIUXDBZ	1-Gang Extra Duty In-Use Cover 18 in 1	Bronze	10
1GWIUXDGY	1-Gang Extra Duty In-Use Cover 18 in 1	Gray	10
1GWIUXDWH	1-Gang Extra Duty In-Use Cover 18 in 1	White	10
1GWIUXDB	Deep Base 1-Gang Extra Duty In-Use Cover For Siding 18 in 1	Clear/Gray	8
1GWIUXDP	Extra Deep 1-Gang Extra Duty In-Use Cover 18 in 1	Clear/Gray	6

NATIONAL ELECTRICAL CODE 2014 EDITION
406.9 Receptacles in Damp or Wet Locations
(B) Wet Locations.
(1) Receptacles of 15 and 20 Amperes in a Wet Location.
15- and 20-ampere, 125- and 250-volt receptacles installed in a wet location shall have an enclosure that is weatherproof whether or not the attachment plug cap is inserted.
An outlet box hood installed for this purpose shall be listed and shall be identified as "extra-duty." All 15- and 20- ampere, 125- and 250-volt nonlocking-type receptacles shall be listed weather resistant type.

2 GANG EXTRA DUTY PLASTIC IN-USE COVERS

c UL us LISTED
E362580

- UL **Extra Duty** Listed
- Patented 45 in 1 Multi-Configuration Design
- Durable Polycarbonate Construction
- Lockable
- Easy to Install
- Includes Gasket and Mounting Hardware
- NEC Compliant

45in1

Fits Full Size Padlock

2GWIUXD
2-3/4" Deep

2GWIUXDB
5-1/4"" Deep
Extra Deep Base

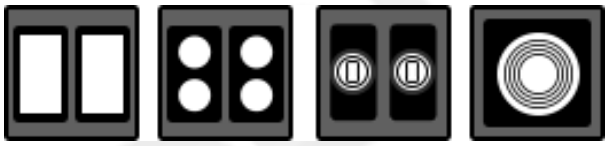

Various Configurations of:
GFCI Duplex Switch Rounds:
1-1/4" 1-3/8" 1-9/16" 1-5/8" 1-11/16"
2-1/8" 2-1/4" 2-7/16"

Superflex Item No.	Description	Color	Pkg Qty
2GWIUXD	2-Gang Extra Duty In-Use Cover 45 in 1	Clear/Gray	6
2GWIUXDB	Extra Deep Base 2-Gang Extra Duty In-Use Cover 45 in 1	Clear/Gray	4

1 GANG PLASTIC COVERS

c UL us LISTED
E362580

- Patented Multi-Configuration Design
- 1 Gang can be used Horizontally or Vertically
- Durable Polycarbonate Construction
- Lockable
- Easy to Install
- Includes Gasket and Mounting Hardware
- NEC Compliant
- Not intended for use with cover closed

18in1

Mounts Horizontally Vertically

Fits Full Size Padlock

1GWIUXDSL
1-3/4" Deep

45in1

Fits Full Size Padlock

2GWIUXDSL
1-5/8" Deep

GFCI Duplex Switch
6 Rounds:
1-1/4" 1-3/8" 1-9/16" 1-5/8" 1-11/16" 2-1/8"

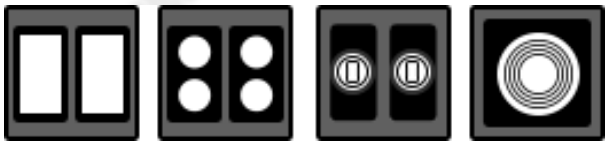

Various Configurations of:
GFCI Duplex Switch Rounds:
1-1/4" 1-3/8" 1-9/16" 1-5/8" 1-11/16"
2-1/8" 2-1/4" 2-7/16"

Superflex Item No.	Description	Color	Pkg Qty
1GWIUXDSL	1-Gang Plastic Cover 18 in 1	Clear/Gray	16
2GWIUXDSL	2-Gang Plastic Cover 45 in 1	Clear/Gray	10

EXTRA DUTY PLASTIC SLIM WHILE IN USE COVERS

C US
174008

- Can be used with GFCI or duplex outlets
- Lockable
- Easy to Install
- 15 Amp Rated
- Includes Gasket and Mounting Hardware
- NEC Compliant

1GXDLPV

1GXDLPH

Fits Full
Size Padlock

Superflex Item No.	Description	Color	Pkg Qty
1GXDLPV	1 Gang Extra Duty Slim While In Use Cover Vertical	Gray	6
1GXDLPVWH	1 Gang Extra Duty Slim While In Use Cover Vertical	White	6
1GXDLPVBZ	1 Gang Extra Duty Slim While In Use Cover Vertical	Bronze	6
1GXDLPH	1 Gang Extra Duty Slim While In Use Cover Horizontal	Gray	5
1GXDLPHWH	1 Gang Extra Duty Slim While In Use Cover Horizontal	White	5
1GXDLPHBZ	1 Gang Extra Duty Slim While In Use Cover Horizontal	Bronze	5

EXTRA DUTY METAL IN USE COVERS

C UL US LISTED
E362604

7in1

32in1

GFCI Duplex Switch
5 Rounds:
1-3/8" 1-9/16"/1-5/8" 1-11/16" 2-1/8"

Fits Full
Size Padlock

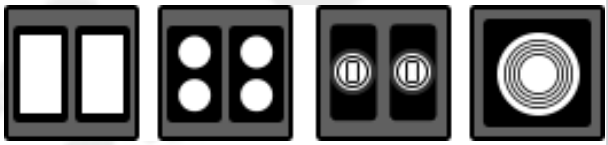

Various Configurations of:
GFCI Duplex Switch Rounds:
1-3/8" 1-9/16"/1-5/8" 1-11/16" 2-1/8" 2-5/8"

Superflex Item No.	Description	Color	Pkg Qty
1GWIUMV	1-Gang Vertical Extra Duty Metal In-Use Cover 7 in 1	Gray	10
1GWIUMH	1-Gang Horizontal Extra Duty Metal In-Use Cover 7 in 1	Gray	10
2GWIUM	2-Gang Extra Duty Metal In-Use Cover 32 in 1	Gray	10

METAL FLAT COVERS

c UL us LISTED
E362604

- Patented Multi-Configuration Design
- Die Cast Metal Construction
- Includes Gasket and Mounting Hardware
- Powdercoat Finish
- Easy to Install
- NEC Compliant

1GCV

2GC

1GCH

1GCVTL

Multi-Configuration

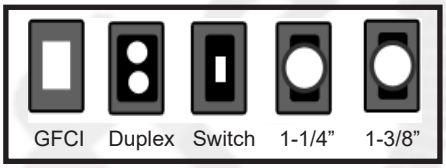

Lockable

2GCTL

Superflex Item No.	Description	Color	Pkg Qty
1GCV	1-Gang Weatherproof Box Cover 10 in 1 Vertical	Gray	20
1GCVBZ	1-Gang Weatherproof Box Cover 10 in 1 Vertical	Bronze	20
1GCVWH	1-Gang Weatherproof Box Cover 10 in 1 Vertical	White	20
1GCVTL	1-G WP Box Cover For Twist Lock, Rounds and Switch 7 in 1 Vertical	Gray	20
1GCH	1-Gang Weatherproof Box Cover 10 in 1 Horizontal	Gray	20
1GCHBZ	1-Gang Weatherproof Box Cover 10 in 1 Horizontal	Bronze	20
1GCHWH	1-Gang Weatherproof Box Cover 10 in 1 Horizontal	White	20
2GC	2-Gang Weatherproof Box Cover 25 in 1	Gray	6
2GCBZ	2-Gang Weatherproof Box Cover 25 in 1	Bronze	6
2GCWH	2-Gang Weatherproof Box Cover 25 in 1	White	6
2GCTL	2-Gang Weatherproof Box Cover for 2-1/8" Dia. 40-50A Receptacle	Gray	6

METAL FLAT COVERS

c UL us LISTED
E362604

3GC

1GCHD

1GTC

1GTCK

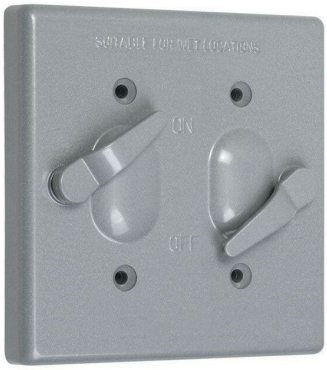

2GTC

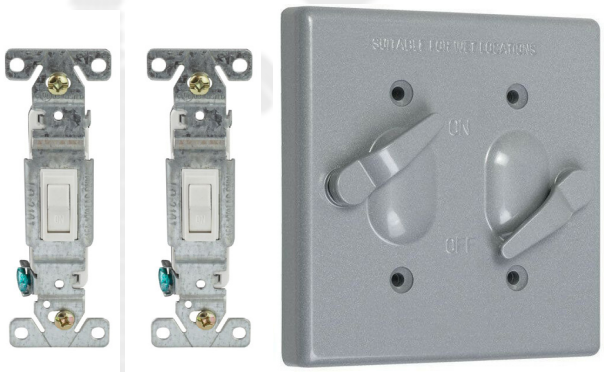

2GTCK

Superflex Item No.	Description	Color	Pkg Qty
3GC	3-Gang Weatherproof Box Cover 125 in 1	Gray	6
1GCHD	Horizontal Duplex Weatherproof Box Cover	Gray	20
1GCHDBZ	Horizontal Duplex Weatherproof Box Cover	Bronze	20
1GCHDWH	Horizontal Duplex Weatherproof Box Cover	White	20
Toggle Covers			
1GTC	1-Gang Weatherproof Toggle Cover	Gray	10
1GTCBZ	1-Gang Weatherproof Toggle Cover	Bronze	10
1GTCK	1-Gang Weatherproof Toggle Cover Kit With 15A Toggle Switch	Gray	6
2GTC	2-Gang Weatherproof Toggle Cover	Gray	5
2GTCK	2-Gang WP Toggle Cover With 15A Switches	Gray	4

BLANK COVERS

c UL us LISTED
E362604

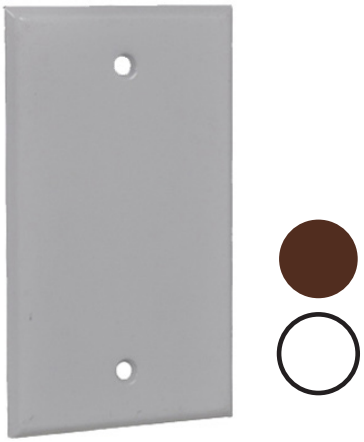

1GBC

2GBC

3GBC

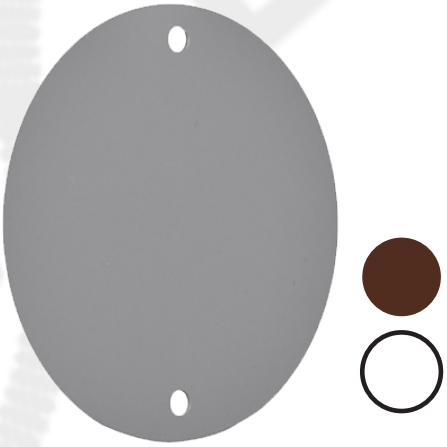

RBC

Superflex Item No.	Description	Color	Pkg Qty
1GBC	1-Gang Blank Cover	Gray	20
1GBCBZ	1-Gang Blank Cover	Bronze	20
1GBCWH	1-Gang Blank Cover	White	20
2GBC	2-Gang Blank Cover	Gray	20
2GBCBZ	2-Gang Blank Cover	Bronze	20
2GBCWH	2-Gang Blank Cover	White	20
3GBC	3-Gang Blank Cover	Gray	5
RBC	Round Blank Cover	Gray	20
RBCBZ	Round Blank Cover	Bronze	20
RBCWH	Round Blank Cover	White	20

1 GANG RECTANGULAR OUTLET BOXES

c UL us LISTED
E362604

1GB350

1GB375

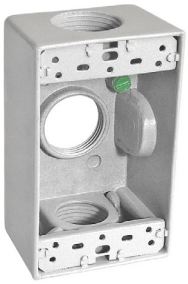

1GB3100

1GB450

1GB475

1GB550

1GB575

1GB550X

1GB575X

Superflex Item No.	Description	Color	Pkg Qty
1-Gang Three Hole Outlet Boxes			
1GB350	1-Gang Rectangular Box 3 1/2" Holes	Gray	16
1GB350BZ	1-Gang Rectangular Box 3 1/2" Holes	Bronze	16
1GB350WH	1-Gang Rectangular Box 3 1/2" Holes	White	16
1GB375	1-Gang Rectangular Box 3 3/4" Holes	Gray	16
1GB375BZ	1-Gang Rectangular Box 3 3/4" Holes	Bronze	16
1GB375WH	1-Gang Rectangular Box 3 3/4" Holes	White	16
1GB3100	1-Gang Rectangular Box 3 1" Holes	Gray	16
1-Gang Four Hole Outlet Boxes			
1GB450	1-Gang Rectangular Box 4 1/2" Holes	Gray	16
1GB450BZ	1-Gang Rectangular Box 4 1/2" Holes	Bronze	16
1GB475	1-Gang Rectangular Box 4 3/4" Holes	Gray	16
1-Gang Five Hole Outlet Boxes			
1GB550	1-Gang Rectangular Box 5 1/2" Holes	Gray	16
1GB575	1-Gang Rectangular Box 5 3/4" Holes	Gray	16
1GB550X	1-Gang Rectangular Box 5 1/2" Holes Side Lug	Gray	16
1GB575X	1-Gang Rectangular Box 5 3/4" Holes Side Lug	Gray	16

1 GANG RECTANGULAR DEEP OUTLET BOXES

c UL us LISTED
E362604

1GDB350

1GDB375

1GDB3100

1GDB450

1GDB475

1GDB575X

Superflex Item No.	Description	Color	Pkg Qty
1-Gang Deep Three Hole Outlet Boxes			
1GDB350	1-Gang Rectangular Deep Box 3 1/2" Holes	Gray	10
1GDB375	1-Gang Rectangular Deep Box 3 3/4" Holes	Gray	10
1GDB375WH	1-Gang Rectangular Deep Box 3 3/4" Holes	White	10
1GDB3100	1-Gang Rectangular Deep Box 3 1" Holes	Gray	10
1-Gang Deep Four Hole Outlet Boxes			
1GDB450	1-Gang Deep Box 4 1/2" Holes	Gray	10
1GDB475	1-Gang Deep Box 4 3/4" Holes	Gray	10
1-Gang Deep Four Hole Outlet Boxes			
1GDB575X	1-Gang Deep Box 5 3/4" Holes Side Lug	Gray	10

2 GANG RECTANGULAR OUTLET BOXES

c UL us LISTED
E362604

2GB350

2GB375

2GB450

2GB475

2GB550

2GB575

2GB550X

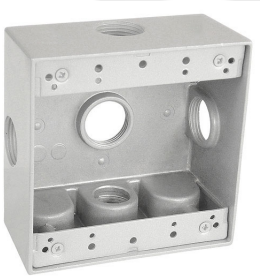
2GB575X

Superflex Item No.	Description	Color	Pkg Qty
2-Gang Three Hole Outlet Boxes			
2GB350	2-Gang Box 3 1/2" Holes	Gray	9
2GB350BZ	2-Gang Box 3 1/2" Holes	Bronze	9
2GB375	2-Gang Box 3 3/4" Holes	Gray	9
2GB375BZ	2-Gang Box 3 3/4" Holes	Bronze	9
2GB3100	2-Gang Box 3 1" Holes	Gray	9
2-Gang Four Hole Outlet Boxes			
2GB450	2-Gang Box 4 1/2" Holes	Gray	9
2GB475	2-Gang Box 4 3/4" Holes	Gray	9
2-Gang Five Hole Outlet Boxes			
2GB550	2-Gang Box 5 1/2" Holes	Gray	9
2GB575	2-Gang Box 5 3/4" Holes	Gray	9
2GB550X	2-Gang Box 5 1/2" Holes Side Lug	Gray	9
2GB575X	2-Gang Box 5 3/4" Holes Side Lug	Gray	9
2GB5100X	2-Gang Box 5 1" Holes	Gray	9

2 GANG RECTANGULAR OUTLET BOXES

c UL us LISTED
E362604

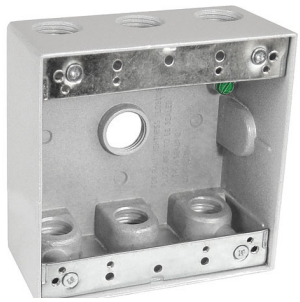

2GB750

2GB750X

2GB775

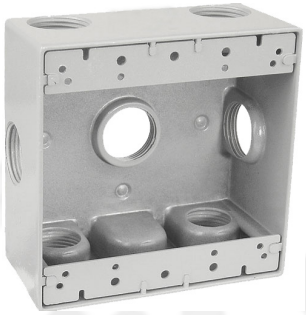

2GB775X

Superflex Item No.	Description	Color	Pkg Qty
2-Gang Seven Hole Outlet Boxes			
2GB750	2-Gang Box 7 1/2" Holes	Gray	9
2GB750X	2-Gang Box 7 1/2" Holes Side Lug	Gray	9
2GB775	2-Gang Box 7 3/4" Holes	Gray	9
2GB775X	2-Gang Box 7 3/4" Holes Side Lug	Gray	9

2 GANG DEEP RECTANGULAR OUTLET BOXES

2GDB550

2GDB575

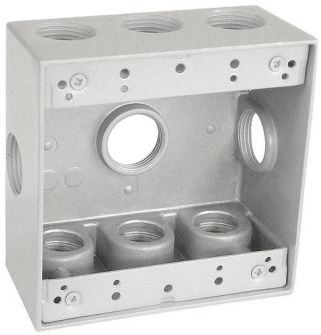

2GDB775X

2GDB5100

2-Gang Five Hole Deep Outlet Boxes			
2GDB550	2-Gang Deep Box 5 1/2" Holes	Gray	6
2GDB575	2-Gang Deep Box 5 3/4" Holes	Gray	6
2GDB775X	2-Gang Deep Box 7 3/4" Holes with Side Lugs	Gray	6
2GDB5100	2-Gang Deep Box 5 1" Holes with Side Lugs	Gray	6

3 GANG RECTANGULAR OUTLET BOXES

c UL us LISTED
E362604

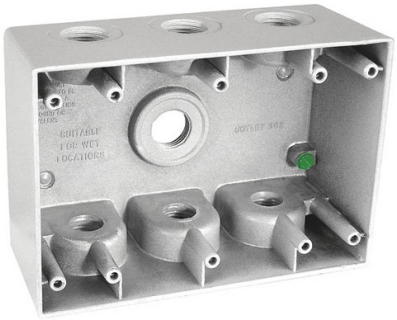

3GB750

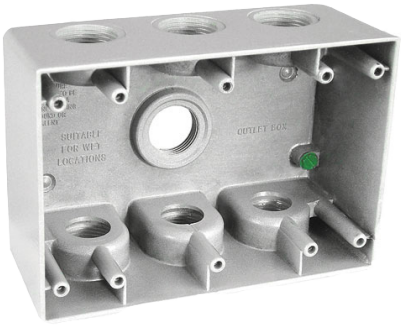

3GB775

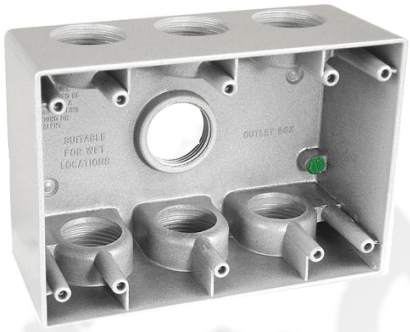

3GB7100

Superflex Item No.	Description	Color	Pkg Qty
3-Gang Seven Hole Deep Outlet Boxes			
3GB750	3-Gang Box 7 1/2" Holes	Gray	5
3GB775	3-Gang Box 7 3/4" Holes	Gray	5
3GB7100	3-Gang Box 7 1" Holes	Gray	5

ROUND OUTLET BOXES

RB550

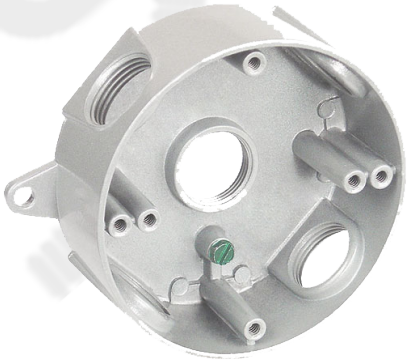

RB575

Five Hole Round Outlet Boxes			
RB550	Round Box 5 1/2" Holes	Gray	13
RB550BZ	Round Box 5 1/2" Holes	Bronze	13
RB550WH	Round Box 5 1/2" Holes	White	13
RB575	Round Box 5 3/4" Holes	Gray	13
RB575BZ	Round Box 5 3/4" Holes	Bronze	13
RB575WH	Round Box 5 3/4" Holes	White	13

OUTLET BOX EXTENSIONS

c UL us LISTED

E362604

1GER

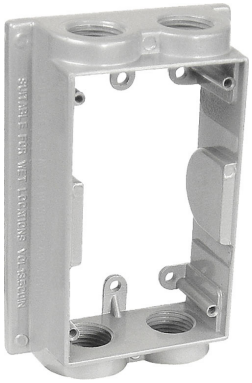

1GER450

1GER475

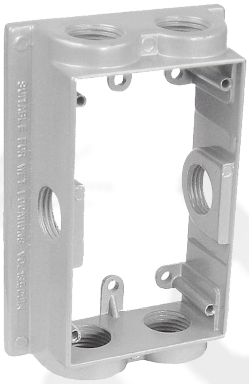

1GER650

1GER675

2GER

Also available with 6 1/2" or 6 3/4" Hubs

RER450

RER475

Superflex Item No.	Description	Color	Pkg Qty
1-Gang Extension Rings			
1GER	Rectangular Extension Ring No Holes	Gray	8
1GER450	Rectangular Extension Ring 4 1/2" Holes	Gray	6
1GER475	Rectangular Extension Ring 4 3/4" Holes	Gray	6
1GER650	Rectangular Extension Ring 6 1/2" Holes	Gray	6
1GER675	Rectangular Extension Ring 6 3/4" Holes	Gray	6
2-Gang Extension Ring			
2GER	2-Gang Extension Ring	Gray	6
2GER650	2-Gang Extension Ring 6 1/2" Holes	Gray	6
2GER675	2-Gang Extension Ring 6 3/4" Holes	Gray	6
Round Extension Ring			
RER450	Round Extension Ring 4 1/2" Holes	Gray	8
RER475	Round Extension Ring 4 3/4" Holes	Gray	8

LAMPHOLDER COVERS

c UL us LISTED
E362597

LHC1H

LHC3H

LHCR1H

LHCR3H

Superflex Item No.	Description	Color	Pkg Qty
Rectangle One Hole Lampholder Cover			
LHC1H	One 1/2" Hole Rectangular Cover	Gray	15
LHC1HBZ	One 1/2" Hole Rectangular Cover	Bronze	15
LHC1HWH	One 1/2" Hole Rectangular Cover	White	15
Rectangle Three Hole Lampholder Cover			
LHC3H	Three 1/2" Hole Rectangular Cover	Gray	15
LHC3HBZ	Three 1/2" Hole Rectangular Cover	Bronze	15
LHC3HWH	Three 1/2" Hole Rectangular Cover	White	15
Round One Hole Lampholder Cover			
LHCR1H	One 1/2" Hole Round Cover	Gray	15
LHCR1HBZ	One 1/2" Hole Round Cover	Bronze	15
LHCR1HWH	One 1/2" Hole Round Cover	White	15
Round Three Hole Lampholder Cover			
LHCR3H	Three 1/2" Hole Round Cover	Gray	15
LHCR3HBZ	Three 1/2" Hole Round Cover	Bronze	15
LHCR3HWH	Three 1/2" Hole Round Cover	White	15

LAMPHOLDERS

c UL us LISTED
E362597

LH100

Superflex Item No.	Description	Color	Pkg Qty
Lampholder			
LH100	Standard Lampholder	Gray	20
LH100BZ	Standard Lampholder	Bronze	20
LH100WH	Standard Lampholder	White	20

Closure Plugs

c UL us LISTED
E362604

Superflex Item No.	Description	Color	Pkg Qty (Pcs)
CP50	1/2" Closure Plug 4/Bag	Gray	120
CP50BZ	1/2" Closure Plug 4/Bag	Bronze	120
CP75	3/4" Closure Plug 4/Bag	Gray	120
CP75BZ	3/4" Closure Plug 4/Bag	Bronze	120
CP100	1" Closure Plug 4/Bag	Gray	120

Fan Brace - New Work

c UL us LISTED
E362604

- Rated for 75 lb fans and 150 lb light fixtures
- Includes ground screw and 2 x 8-32 fixture mounting screws
- Sold in boxes of 12 or pallets of 288

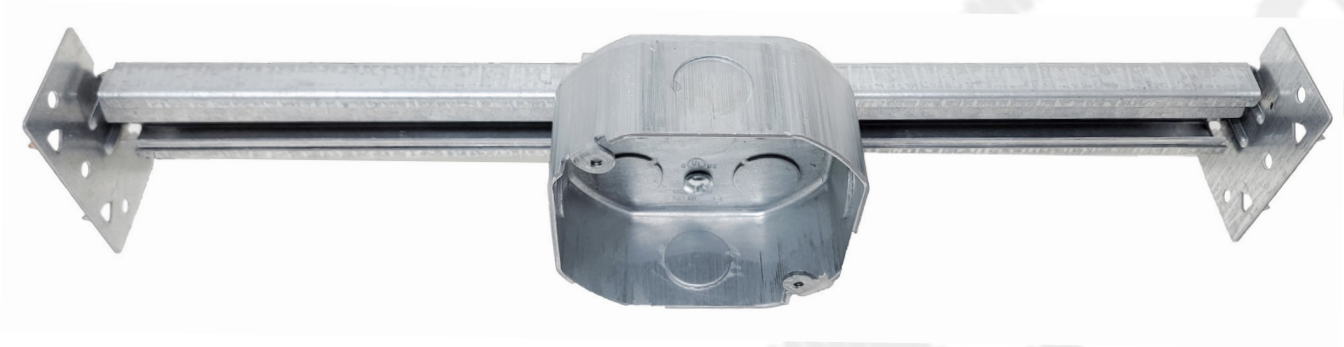

Superflex Item No.	Description	Pkg Qty	Pallet Qty
Fan Brace			
FBNW	Fan Brace - New Work	12	288

Plastic Weatherproof

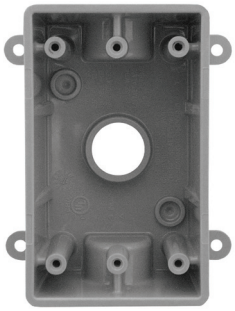

P1GB3HUB

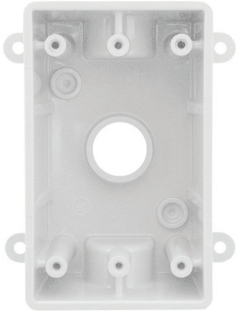

P1GB3HUBWH

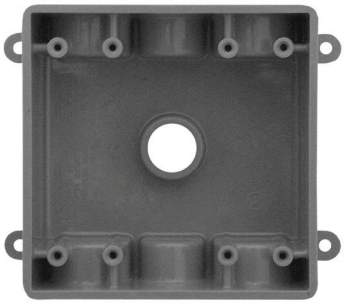

P2GB7HUB

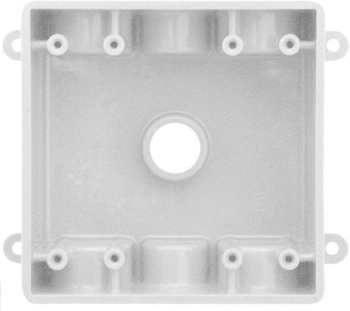

P2GB7HUBWH

PRB5HUB

PRB5HUBWH

PCP50

PCP50WH

Superflex Item No.	Description	Color	Pkg Qty
1-Gang Plastic Three Hole Outlet Boxes			
P1GB3HUB	1G Plastic Box 3 3/4" Hubs, 1/2" Reducers	Gray	16
P1GB3HUBWH	1G Plastic Box 3 3/4" Hubs, 1/2" Reducers	White	16
2-Gang Plastic 7 Hole Outlet Boxes			
P2GB7HUB	2G Plastic Box 7 1/2" Hubs	Gray	9
P2GB7HUBWH	2G Plastic Box 7 1/2" Hubs	White	9
Round Plastic Five Hole Outlet Boxes			
PRB5HUB	Round Plastic Box 5 3/4" Hubs, 1/2" Reducers	Gray	13
PRB5HUBWH	Round Plastic Box 5 3/4" Hubs, 1/2" Reducers	White	13
Plastic Closure Plugs			
PCP50	1/2" Closure Plug Grey	Gray	100
PCP50WH	1/2" Closure Plug White	White	100

Plastic Weatherproof

P1GBC

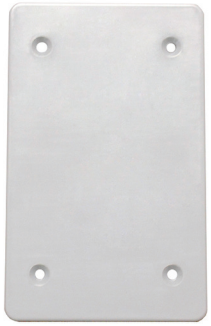

P1GBCWH

P2GBC

P2GBCWH

PRBC

PRBCWH

Superflex Item No.	Description	Color	Pkg Qty
1-Gang Plastic Blank Covers			
P1GBC	1G Plastic Blank Cover	Gray	20
P1GBCWH	1G Plastic Blank Cover	White	20
Round Plastic Blank Covers			
PRBC	Round Plastic Blank Cover	Gray	20
PRBCWH	Round Plastic Blank Cover	White	20
2-Gang Plastic Blank Covers			
P2GBC	2G Plastic Blank Cover	Gray	10
P2GBCWH	2G Plastic Blank Cover	White	10
Plastic Closure Plugs			
PCP50	1/2" Closure Plug Grey	Gray	100
PCP50WH	1/2" Closure Plug White	White	100

Plastic Weatherproof

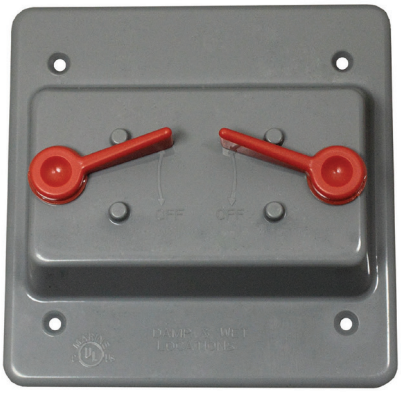

P2GTC

P2GCTG

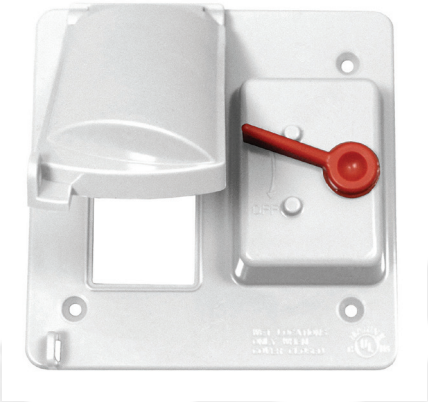

P2GCTGWH

Superflex Item No.	Description	Color	Pkg Qty
Plastic Universal Covers			
P1GC	1G Plastic Universal Cover	Gray	10
P1GCWH	1G Plastic Universal Cover	White	10
P2GC	2G Plastic Universal Cover	Gray	8
P2GCWH	2G Plastic Universal Cover	White	8
1-Gang Plastic Horizontal Lockable Duplex Covers			
P1GCHD	1G Plastic Hor. Lockable Duplex Cover	Gray	20
P1GCHDWH	1G Plastic Hor. Lockable Duplex Cover	White	20
Plastic Toggle Covers			
P1GTC	1G Plastic Toggle Cover	Gray	12
P1GTCWH	1G Plastic Toggle Cover	White	12
P2GTC	2G Plastic Toggle Cover	Gray	8
P2GTCWH	2G Plastic Toggle Cover	White	8
2 Gang Plastic Toggle Cover Combos			
P2GCTG	2G Plastic GFCI/Toggle Combo	Gray	8
P2GCTGWH	2G Plastic GFCI/Toggle Combo	White	8
P2GCTD	2G Plastic Duplex/Toggle Combo	Gray	8
P2GCTDWH	2G Plastic Duplex/Toggle Combo	White	8

Plastic Weatherproof

PLH

PLHWH

PLHCR

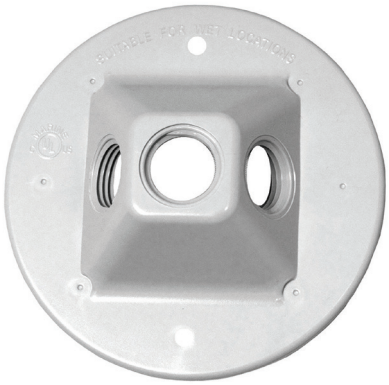

PLHCRWH

Superflex Item No.	Description	Color	Pkg Qty
Plastic Lampholders			
PLH	Plastic Lampholder	Gray	20
PLHWH	Plastic Lampholder	White	20
Plastic Round Lampholder Covers			
PLHCR	1/2" Plastic 3HL Round Lampholder Cover	Gray	15
PLHCRWH	1/2" Plastic 3HL Round Lampholder Cover	White	15
Plastic Rectangular Lampholder Covers			
PLHC	1/2" Plastic 3HL Rec. Lampholder Cover	Gray	15
PLHCWH	1/2" Plastic 3HL Rec. Lampholder Cover	White	15

Nonmetallic Liquid Tight Straight Conduit Connectors

C UL US LISTED
E197675

- Available ⅜" through 2"
- All nylon construction resists salt water, weak acids, gasoline, alcohol, oil, grease, & common solents
- No disassembly required. Instead, the installer simply pushes the conduit or tubing onto the ferrule, tightening the domed sealing nut. The completed assembly can then be secured in the chassis by the locknut (or first secure the connector into an NPT threaded hole)
- No threading of the conduit or tubing required to install, eliminating the possibility of cutting the conduit & creating leak paths
- Standard color - Black or Gray

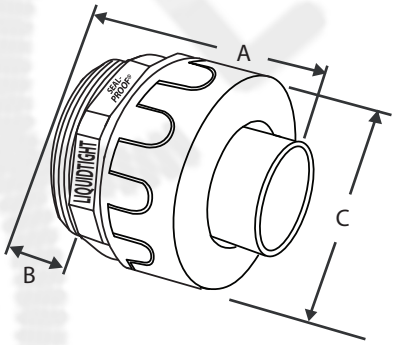

Part No.		Trade Size	K.O. Size	Std. Pkg.	Weight Per Pkg.	Part Dimensions (inches)		
Gray	Black					A	B	C
-	8398AB	¼"	PG7	100	4	1.750	0.440	1.062
88401	88400		½"	25/100	5	2.000	0.540	1.400
88403	88402	½"	½"	25/100	5	2.000	0.540	1.400
88405	88404	¾"	¾"	10/100	7	2.200	0.635	1.700
88407	88406	1"	1"	5/50	7	2.280	0.740	2.000
88409	88408	1-¼"	1-¼"	5/25	5	2.440	0.760	2.400
88411	88410	1-½"	1-½"	2/10	3	2.700	0.800	2.670
88413	88412	2"	2"	2/10	4	2.990	0.850	3.280

Nonmetallic Liquid Tight 90° Conduit Connectors

C UL US LISTED
E197675

- Complete conduit/connector system is reusable. Conduit will not wind tight onto the connector during assembly & can be easily removed by pulling while turning in a clockwise direction
- Suitable for indoor/outdoor use; for original equipment manufacturers or field installers
- Lower installed cost
- Molded of type nylon 6. Flammability classification 94V-2; temperature index 125° C

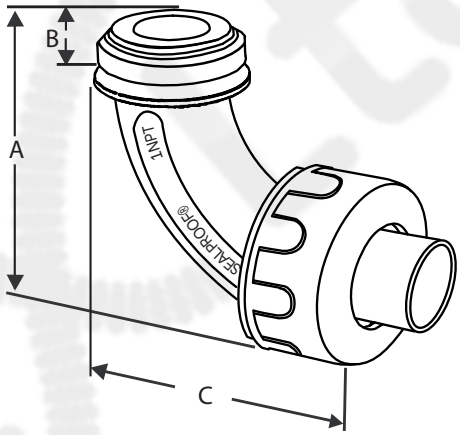

Part No.		Trade Size	K.O. Size	Std. Pkg.	Weight Per Pkg.	Part Dimensions (inches)		
Gray	Black					A	B	C
88416	88415	⅜"	½"	10/100	5	2.120	0.500	3.120
88418	88417	½"	½"	10/100	5	2.120	0.500	3.120
88420	88419	¾"	¾"	10/100	10	2.500	0.520	3.600
88422	88421	1"	1"	5/50	8	3.125	0.700	4.125
88424	88423	1-¼"	1-¼"	5/25	7	4.450	0.760	5.200
88426	88425	1-½"	1-½"	2/10	4	4.750	0.800	5.200
88428	88427	2"	2"	2/10	5	5.420	0.860	5.800

Nonmetallic Liquid Tight Screw-On Conduit Connectors

c UL us LISTED

E197675

- Available in ½" & ¾" trade size
- PVC construction produced from UV rated material for long outdoor life
- Attractive one-piece design
- No disassembly required; simply screw the connector onto the conduit
- Time & cost saving benefits over other brands
- Design allows superior liquid-tight seal & optimum pull strength without compression nut
- U.S. Patent No. 7.048.561

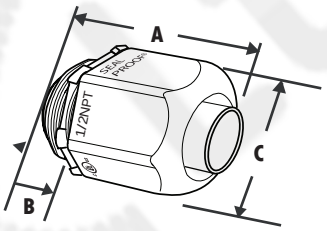

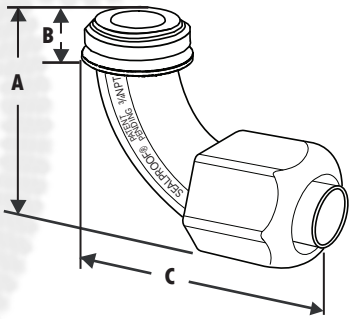

Part No.	Description	Trade Size	K.O. Size	Std. Pkg.	Weight Per Pkg.	Part Dimensions (inches)		
						A	B	C
88503	Straight Screw On	½"	½"	25/100	5	1.750	0.500	1.250
88505	Straight Screw On	¾"	¾"	25/100	7	1.800	0.625	1.500
88518	90° Sweep Screw On	½"	½"	10/100	7	1.875	0.500	3.125
88520	90° Sweep Screw On	¾"	¾"	10/100	9	2.375	0.625	3.500

Nonmetallic LT Multi-Angle Conduit Connectors

c UL us LISTED
E197675

- Available in 1/2 inch and 3/4 inch sizes
- All nylon construction resists salt water, weak acids, gasoline, alcohol, oil, grease, and common solvents
- No disassembly required. Instead, the installer simply pushes the conduit or tubing onto the ferrule, tightening the domed sealing nut. The completed assembly can then be secured in the chassis by the locknut (or first secure the connector into an NPT threaded hole)
- Standard color - Black or Gray
- Eliminate inventory, as the swivel design can be substitued for a Straight or 90° connector
- Molded of type nylon 6. Flammability classification 94V-2: temperature index 125°C
- Suitable for indoor/outdoor use
- "0" Ring and steel locknut included
- U.S. Patent No. 7.658.418

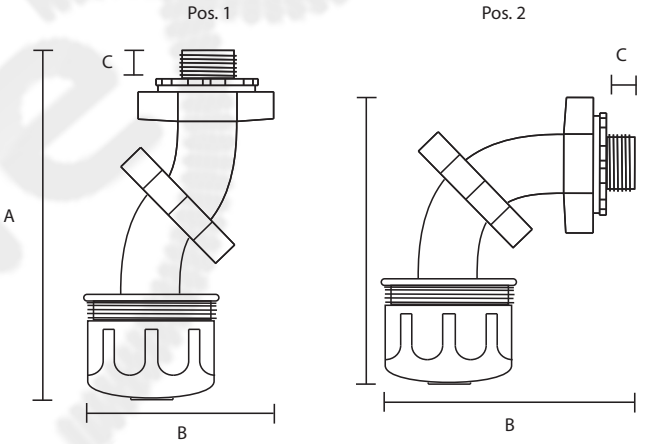

Part No.	Color	Trade Size	K.O. Size	Std. Pkg.	Weight Per Pkg.	Part Dimensions (inches)					
						1A	1B	1C	2A	2B	2C
88618	Gray	½"	½"	100	7	3.350"	2.15"	0.500"	3.025"	2.395"	0.500"
88620	Gray	¾"	¾"	100	7	4.30"	2.65"	0.520"	3.850"	3.350"	0.520"
88617	Black	½"	½"	100	7	3.350"	2.15"	0.500"	3.025"	2.395"	0.500"
88619	Black	¾"	¾"	100	7	4.30"	2.65"	0.520"	3.850"	3.350"	0.520"

Nonmetallic Liquid Tight Straight Conduit Connectors

c UL us LISTED

E197675

- Available ⅜″ through 4″
- For use with both Metallic Liquid Tight Conduit and Nonmetalic Liquid Tight Type B
- Zinc die cast construction resists salt water, weak acids, gasoline, alcohol, oil, grease, & common solvents
- Resistant to outdoor weather conditions
- No disassembly required. Instead, the installer simply twists the conduit or tubing onto the ferrule, tightening the domed sealing nut.
- Suitable for indoor/outdoor use; for original equipment manufacturers or field installers
- "O" Ring & zinc locknut included

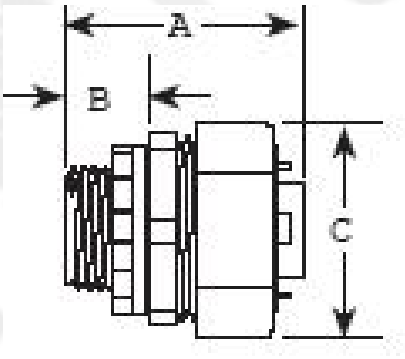

Part No.	Trade Size	K.O. Size	Std. Pkg.	Weight Per Pkg.	Part Dimensions (inches)		
					A	B	C
88701	⅜″	½″	100	18	1.58″	1.18″	0.53″
88703	½″	½″	100	18	1.58″	1.18″	0.53″
88705	¾″	¾″	100	23	1.69″	1.57″	0.58″
88707	1″	1″	25	10	2.06″	1.81″	0.58″
88709	1-¼″	1-¼″	25	15	2.06″	2.18″	0.61″
88711	1-½″	1-½″	10	7.5	2.09″	2.51″	0.63″
88713	2″	2″	10	12	2.15″	3.03″	0.63″
88729	2-½″	2-½″	5	7.5	3.54″	3.68″	1.02″
88731	3″	3″	1	2	4.04″	4.38″	1.07″
88735	4″	4″	1	4	4.99″	5.54″	1.15″

Nonmetallic Liquid Tight 90° Conduit Connectors

c UL us LISTED
E197675

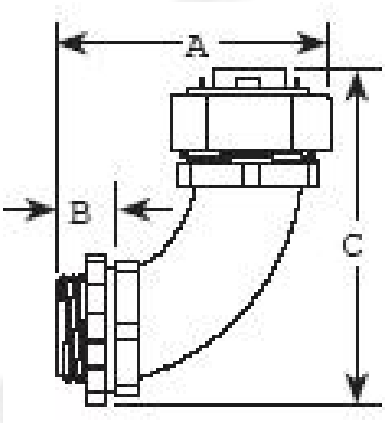

Part No.	Trade Size	K.O. Size	Std. Pkg.	Weight Per Pkg.	Part Dimensions (inches)		
					A	B	C
88716	⅜″	½″	100	27	2.11″	2.53″	0.53″
88718	½″	½″	100	28	2.24″	2.46″	0.53″
88720	¾″	¾″	100	38	2.47″	2.79″	0.55″
88722	1″	1″	25	16	3.46″	3.86″	0.58″
88724	1-¼″	1-¼″	25	25	3.37″	3.99″	0.67″
88726	1-½″	1-½″	10	13	4.28″	5.04″	0.61″
88728	2″	2″	10	19	4.21″	5.06″	0.71″
88730	2-½″	2-½″	1	4	5.75″	7.00″	1.03″
88732	3″	3″	1	5	6.00″	7.25″	0.99″
88736	4″	4″	1	7	8.75″	10.00″	1.17″

Conduit Bodies

c UL us LISTED
E362604

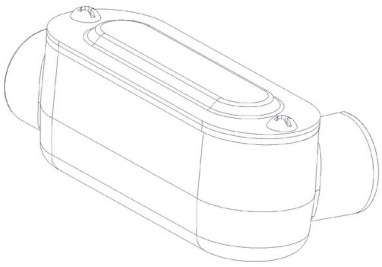

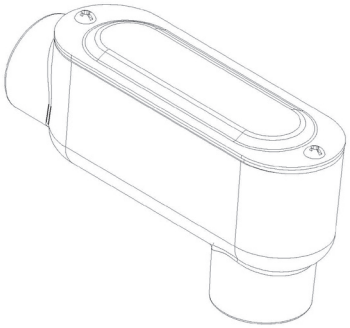

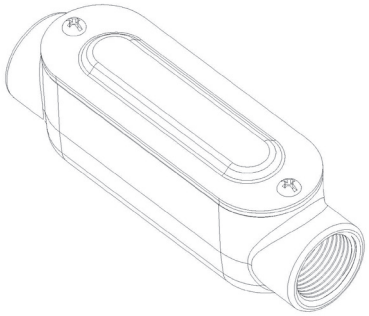

Item No.	Trade Size	Color	Inner Pkg Qty	Outer Pkg Qty
LR Series Threaded Conduit Bodies with Steel Cover & Gasket				
LR050	1/2"	Gray	10	100
LR075	3/4"	Gray	10	50
LR100	1"	Gray	5	25
LR125	1-1/4"	Gray	2	10
LR150	1-1/2"	Gray	2	10
LR200	2"	Gray	N/A	5
LR250	2-1/2"	Gray	N/A	1
LR300	3"	Gray	N/A	1
LR350	3-1/2"	Gray	N/A	1
LR400	4"	Gray	N/A	1
LB Series Threaded Conduit Bodies with Steel Cover & Gasket				
LB050	1/2"	Gray	10	100
LB075	3/4"	Gray	10	50
LB100	1"	Gray	5	25
LB125	1-1/4"	Gray	2	10
LB150	1-1/2"	Gray	2	10
LB200	2"	Gray	N/A	5
LB250	2-1/2"	Gray	N/A	1
LB300	3"	Gray	N/A	1
LB350	3-1/2"	Gray	N/A	1
LB400	4"	Gray	N/A	1
LC Series Threaded Conduit Bodies with Steel Cover & Gasket				
LC050	1/2"	Gray	10	100
LC075	3/4"	Gray	10	50
LC100	1"	Gray	5	25
LC125	1-1/4"	Gray	2	10
LC150	1-1/2"	Gray	2	10
LC200	2"	Gray	N/A	5
LC250	2-1/2"	Gray	N/A	1
LC300	3"	Gray	N/A	1
LC350	3-1/2"	Gray	N/A	1
LC400	4"	Gray	N/A	1

Conduit Bodies

c UL us LISTED
E362604

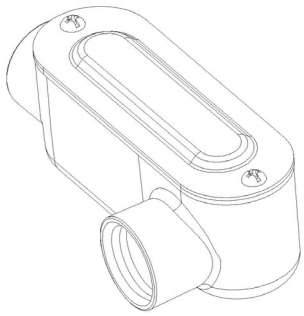

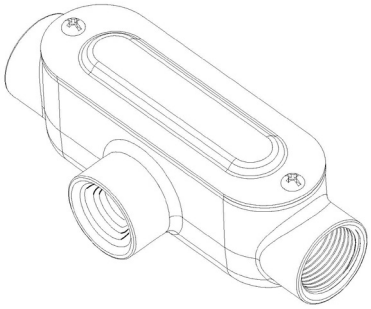

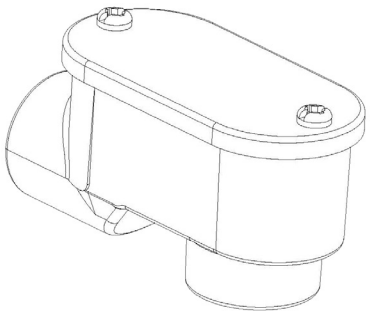

Item No.	Trade Size	Color	Inner Pkg Qty	Outer Pkg Qty
LL Series Threaded Conduit Bodies with Steel Cover & Gasket				
LL050	1/2"	Gray	10	100
LL075	3/4"	Gray	10	50
LL100	1"	Gray	5	25
LL125	1-1/4"	Gray	2	10
LL150	1-1/2"	Gray	2	10
LL200	2"	Gray	N/A	5
LL250	2-1/2"	Gray	N/A	1
LL300	3"	Gray	N/A	1
LL350	3-1/2"	Gray	N/A	1
LL400	4"	Gray	N/A	1
LT Series Threaded Conduit Bodies with Steel Cover & Gasket				
LT050	1/2"	Gray	10	100
LT075	3/4"	Gray	10	50
LT100	1"	Gray	5	25
LT125	1-1/4"	Gray	2	10
LT150	1-1/2"	Gray	2	10
LT200	2"	Gray	N/A	5
LT250	2-1/2"	Gray	N/A	1
LT300	3"	Gray	N/A	1
LT350	3-1/2"	Gray	N/A	1
LT400	4"	Gray	N/A	1
SLB Series Threaded Conduit Bodies with Steel Cover & Gasket				
SLB050	1/2"	Gray	N/A	10
SLB075	3/4"	Gray	N/A	5
SLB100	1"	Gray	N/A	3
SLB125	1-1/4"	Gray	N/A	2
SLB150	1-1/2"	Gray	N/A	2
SLB200	2"	Gray	N/A	2

Item No.	Inner Pack Qty	Outer Pack Qty	Weight/Ctn (lbs)	Weight/Pc (lbs)	UPC
LR050	10	100	30.4	0.3	65874635781
LR075	10	50	20.8	0.4	65874635782
LR100	5	25	14.7	0.5	65874635783
LR125	2	10	13.3	1.2	65874635784
LR150	2	10	13.2	1.2	65874635785
LR200	N/A	5	12.0	2.2	65874635786
LR250	N/A	1	4.5	3.4	65874635787
LR300	N/A	1	4.7	3.6	65874635788
LR350	N/A	1	8.6	7.5	65874635789
LR400	N/A	1	8.2	7.1	65874635790
LB050	10	100	28.9	0.3	65874635791
LB075	10	50	20.5	0.4	65874635792
LB100	5	25	14.4	0.5	65874635793
LB125	2	10	13.7	1.3	65874635794
LB150	2	10	13.5	1.2	65874635795
LB200	N/A	5	9.6	1.7	65874635796
LB250	N/A	1	4.4	3.3	65874635797
LB300	N/A	1	4.7	3.6	65874635798
LB350	N/A	1	8.8	7.7	65874635799
LB400	N/A	1	8.0	6.9	65874635800
LC050	10	100	27.4	0.3	65874635801
LC075	10	50	19.5	0.4	65874635802
LC100	5	25	11.8	0.4	65874635803
LC125	2	10	12.0	1.1	65874635804
LC150	2	10	11.9	1.1	65874635805
LC200	N/A	5	10.4	1.9	65874635806
LC250	N/A	1	4.3	3.2	65874635807
LC300	N/A	1	4.4	3.3	65874635808
LC350	N/A	1	8.5	7.4	65874635809
LC400	N/A	1	8.0	6.9	65874635810
LL050	10	100	30.1	0.3	65874635811
LL075	10	50	17.6	0.3	65874635812
LL100	5	25	14.7	0.5	65874635813
LL125	2	10	13.1	1.2	65874635814
LL150	2	10	12.2	1.1	65874635815
LL200	N/A	5	11.8	2.1	65874635816
LL250	N/A	1	4.5	3.4	65874635817
LL300	N/A	1	4.8	3.7	65874635818
LL350	N/A	1	8.7	7.6	65874635819
LL400	N/A	1	8.2	7.1	65874635820

Item No.	Inner Pack Qty	Outer Pack Qty	Weight/Ctn (lbs)	Weight/Pc (lbs)	UPC
LT050	10	100	31.3	0.3	65874635821
LT075	10	50	21.5	0.4	65874635822
LT100	5	25	15.7	0.6	65874635823
LT125	2	10	13.0	1.2	65874635824
LT150	2	10	13.2	1.2	65874635825
LT200	N/A	5	11.6	2.1	65874635826
LT250	N/A	1	4.7	3.6	65874635827
LT300	N/A	1	5.1	4.0	65874635828
LT350	N/A	1	9.4	8.3	65874635829
LT400	N/A	1	8.8	7.7	65874635830
SLB050	N/A	10	1.9	0.1	65874635831
SLB075	N/A	5	1.3	0.2	65874635832
SLB100	N/A	3	1.5	0.4	65874635833
SLB125	N/A	2	1.7	0.7	65874635834
SLB150	N/A	2	2.1	0.8	65874635835
SLB200	N/A	2	2.8	1.2	65874635836

Item No.	Inner Pack Qty	Outer Pack Qty	Weight/Ctn (lbs)	Weight/Pc (lbs)	UPC
1GB3100	/	16	9.9	0.5	658746110820
1GB350	/	16	7.8	0.4	658746110837
1GB350BZ	/	16	7.8	0.4	658746110844
1GB350WH	/	16	7.8	0.4	658746112114
1GB375	/	16	8.1	0.4	658746110868
1GB375BZ	/	16	8.1	0.4	658746112688
1GB375WH	/	16	8.1	0.4	658746112695
1GB450	/	16	8.2	0.4	658746110875
1GB450BZ	/	16	8.2	0.4	658746112701
1GB475	/	16	8.4	0.5	658746110882
1GB550	/	16	8.7	0.5	658746110899
1GB550X	/	16	8.4	0.5	658746110905
1GB575	/	16	8.9	0.5	658746110912
1GB575X	/	16	8.6	0.5	658746112312
1GBC	/	20	3.3	0.1	658746110011
1GBCBZ	/	20	3.4	0.1	658746110028
1GBCWH	/	20	3.4	0.1	658746110035
1GCH	/	20	7.0	0.3	658746110684
1GCHBZ	/	20	7.0	0.3	658746110691
1GCHWH	/	20	7.0	0.3	658746110677
1GCHD	/	20	3.8	0.2	658746111193
1GCHDBZ	/	20	3.8	0.2	658746111209
1GCHDWH	/	20	3.8	0.2	658746111216
1GCV	/	20	7.0	0.3	658746110653
1GCVBZ	/	20	7.0	0.3	658746110660
1GCVWH	/	20	7.0	0.3	658746110646
1GCVTL	/	20	6.3	0.3	658746111650
1GDB350	/	10	6.6	0.6	658746110929
1GDB375	/	10	7.5	0.6	658746110936
1GDB3100	/	10	8.6	0.8	658746231143
1GDB375WH	/	10	7.3	0.7	658746110974
1GDB450	/	10	7.6	0.7	658746112862
1GDB475	/	10	6.4	0.5	658746112879
1GDB575X	/	10	7.5	0.7	658746235615
1GER	/	8	1.8	0.2	658746111827
1GER450	/	6	3.7	0.4	658746110943
1GER475	/	6	3.5	0.4	658746112305
1GER650	/	6	3.6	0.5	658746110950
1GER675	/	6	3.4	0.5	658746110967
1GTC	/	10	2.2	0.2	658746112077
1GTCBZ	/	10	2.2	0.2	658746114187

Item No.	Inner Pack Qty	Outer Pack Qty	Weight/Ctn (lbs)	Weight/Pc (lbs)	UPC
1GTCK	/	6	2.2	0.3	658746114194
1GWIUMH	/	10	11.1	1.1	658746042473
1GWIUMV	/	10	11.1	1.1	658746042480
1GWIUXD	/	10	5.5	0.5	658746042459
1GWIUXDB	/	8	4.6	.53	658746042565
1GWIUXDBZ	/	10	5.5	0.5	658746042664
1GWIUXDGY	/	10	5.5	0.5	658746042756
1GWIUXDP	/	6	3.6	0.6	658746042503
1GWIUXDSL	/	16	10.8	0.6	658746042510
1GWIUXDWH	/	10	5.5	0.5	658746042657
2GB350	/	9	6.5	0.7	658746110110
2GB350BZ	/	9	6.5	0.7	658746114200
2GB375	/	9	6.9	0.7	658746110127
2GB375BZ	/	9	6.9	0.7	658746991191
2GB3100	/	9	9.3	0.9	658746231150
2GB450	/	9	6.9	0.7	658746112244
2GB475	/	9	7.0	0.7	658746112251
2GB5100X	/	9	8.6	0.9	658746231167
2GB550	/	9	7.0	0.7	658746110141
2GB550X	/	9	7.7	0.8	658746112275
2GB575	/	9	7.7	0.7	658746110158
2GB575X	/	9	8.1	0.8	658746112282
2GB750	/	9	5.5	0.8	658746110165
2GB750X	/	9	7.6	0.7	658746112299
2GB775	/	9	8.6	0.9	658746110172
2GB775X	/	9	8.2	0.8	658746110189
2GBC	/	20	5.6	0.3	658746110042
2GBCBZ	/	20	5.8	0.3	658746110240
2GBCWH	/	20	5.8	0.3	658746110349
2GC	/	6	9.7	0.8	658746110714
2GCBZ	/	6	9.7	0.8	658746110721
2GCWH	/	6	9.7	0.8	658746110738
2GCTL	/	6	4.0	0.6	658746114224
2GDB5100	/	6	6.6	1.0	658746231181
2GDB550	/	6	6.5	1.1	658746235622
2GDB575	/	6	6.3	0.9	658746100333
2GDB775X	/	6	7.3	1.1	658746231174
2GER	/	6	2.1	0.2	658746112091
2GER650	/	6	4.9	0.6	658746111087
2GER675	/	6	4.9	0.6	658746111094
2GTC	/	5	1.9	0.3	658746112084

Item No.	Inner Pack Qty	Outer Pack Qty	Weight/Ctn (lbs)	Weight/Pc (lbs)	UPC
2GTCK	/	4	1.9	0.6	658746114231
2GWIUM	/	10	17.2	2.8	658746042497
2GWIUXD	/	6	5.3	0.8	658746042466
2GWIUXDB	/	4	4.1	.90	658746043517
2GWIUXDSL	/	10	6.9	.65	658746043524
3GB7100	/	5	7.9	1.5	658746112626
3GB750	/	5	7.5	1.2	658746112640
3GB775	/	5	7.4	1.3	658746112633
3GBC	/	5	7.7	1.4	658746112602
3GC	/	6	3.3	0.4	658746112619
CP100	/	120	2.3	0.0	658746112237
CP50	/	120	1.1	0.0	658746110073
CP50BZ	/	120	1.1	0.0	658746114248
CP75	/	120	1.4	0.0	658746110103
CP75BZ	/	120	1.4	0.0	658746114255
LH100	/	20	6.3	0.3	658746110301
LH100BZ	/	20	6.3	0.3	658746110318
LH100WH	/	20	6.3	0.3	658746112138
LHC1H	/	15	2.5	0.1	658746111438
LHC1HBZ	/	15	2.6	0.1	658746111445
LHC1HWH	/	15	2.6	0.1	658746110448
LHC3H	/	15	2.8	0.2	658746110455
LHC3HBZ	/	15	2.7	0.2	658746110462
LHC3HWH	/	15	2.8	0.2	658746112176
LHCR1H	/	15	2.8	0.2	658746111490
LHCR1HBZ	/	15	2.8	0.2	658746111506
LHCR1HWH	/	15	2.8	0.2	658746111537
LHCR3H	/	15	2.8	0.1	658746110516
LHCR3HBZ	/	15	2.8	0.1	658746110523
LHCR3HWH	/	15	2.8	0.1	658746112183
RBC	/	20	3.6	0.1	658746110059
RBCBZ	/	20	3.6	0.1	658746110066
RBCWH	/	20	3.6	0.1	658746110080
RB550	/	13	5.8	0.4	658746110776
RB550BZ	/	13	5.8	0.4	658746110783
RB550WH	/	13	5.8	0.4	658746112206
RB575	/	13	7.1	0.5	658746110806
RB575BZ	/	13	7.1	0.5	658746235639
RB575WH	/	13	7.1	0.5	658746235646
RER450	/	8	3.8	0.4	658746110813
RER475	/	8	4.2	0.5	658746235653

Item No.	Inner Pack Qty	Outer Pack Qty	Weight/Ctn (lbs)	Weight/Pc (lbs)	UPC
1GXDLPV	/	6	3.1	0.4	658746235493
1GXDLPVWH	/	6	3.1	0.4	658746235509
1GXDLPVBZ	/	6	3.1	0.4	658746235516
1GXDLPH	/	5	2.7	0.4	658746235554
1GXDLPHWH	/	5	2.7	0.4	658746235561
1GXDLPHBZ	/	5	2.7	0.4	658746235578
FBNW	/	12	26	2.2	658746083063

Superflex Ltd

Item No.	Inner Pack Qty	Outer Pack Qty	Weight/Ctn (lbs)	Weight/Pc (lbs)	UPC
P1GB3HUB	/	16	6.6	0.37	658746082721
P1GB3HUBWH	/	16	6.4	0.36	658746082738
P1GBC	/	20	2.1	0.09	658746082745
P1GBCWH	/	20	2.1	0.09	658746082752
P1GCHD	/	20	2.8	0.11	658746082769
P1GCHDWH	/	20	2.8	0.11	658746082776
P1GC	/	10	1.9	0.17	658746082783
P1GCWH	/	10	1.9	0.17	658746082790
P1GTC	/	12	2.6	0.17	658746082806
P1GTCWH	/	12	2.6	0.17	658746082813
P2GB7HUB	/	9	5.2	0.48	658746082820
P2GB7HUBWH	/	9	5.2	0.48	658746082837
P2GBC	/	10	1.9	0.17	658746082844
P2GBCWH	/	10	1.9	0.17	658746082851
P2GCTD	/	8	3.0	0.31	658746082868
P2GCTDWH	/	8	3.0	0.31	658746082875
P2GCTG	/	8	3.0	0.31	658746082882
P2GCTGWH	/	8	3.0	0.31	658746082899
P2GC	/	8	2.2	0.22	658746082905
P2GCWH	/	8	2.2	0.22	658746082912
P2GTC	/	8	2.5	0.25	658746082929
P2GTCWH	/	8	2.5	0.25	658746082936
PCP50	/	100	0.3	0.00	658746082943
PCP50WH	/	100	0.3	0.00	658746082950
PLH	/	20	4.6	0.21	658746082967
PLHWH	/	20	4.6	0.21	658746082974
PLHC	/	15	1.9	0.09	658746082981
PLHCWH	/	15	1.9	0.09	658746082998

Superflex Ltd., a New Jersey based company engaged in the manufacturing of flexible spiral reinforced hoses & electrical conduit.

Since its foundation in 1981, Superflex has expanded to become a leading force in the electrical and hose industries. Our products have multiple applications used by, but not limited to the electrical, marine craft, aquatic, pond, spa, agricultural, recreational vehicle, & industrial sectors.

We take great pride & care in every aspect of our company. This is reflected in our rigorous quality control measures, our expanded research & development of new applications, & our ever increasing markets & distribution. Superflex produces its Rollerflex™ Spiral reinforced hoses & SEALPROOF® Electrical Conduit & Tubing in its state of the art manufacturing facilities located in Elizabeth, NJ.

The quality of Superflex goods is world renowned. This is reflected in many of Superflex's products approved or recognized by Underwriter Laboratories, Canadian Standard Association, International Association of Plumbing & Mechanical Officials, U.S.D.A. for meat & poultry industries, 3A for the dairy industry, & FDA compliance for the food & beverage industry.

The SEALPROOF® Weatherproof product line maintains the same high quality standards that Superflex Ltd. has upheld since 1981. We have continued to innovate beyond the fields of electrical conduit and spiral reinforced hoses to introduce our new Weatherproof products.

EMAIL ORDERS TO: orders@superflex.com
OR FAX TO : 718-768-5065

400 S Second St.
Elizabeth NJ 07206

Tel: (800) 394-3665
Fax: (718) 768-5065

www.superflex.com
sales@superflex.com

Rev. 2024